hansgrohe

Crometta
Hand shower 100 1jet Green 6 l/min
Surfaces: **white/chrome** Art. no. : **26334400**

Description

product features

- Shower head size: 100 mm
- Spray pattern: Rain
- Flow rate (at 3 bar): 5.7 l/min
- with internal water conduction
- rinseable dirt filter
- Connection thread ½"
- mininum operating pressure 0.5 bar
- winner of the iF product design award 2016
- WRAS 1901002
- WRAS 1901002

Article Details

Price excl. VAT £ 15.83

Technology

Eco Smart
Quick Clean
XXL Performance

Design awards

iF DESIGN AWARD 2016

Certificates

kiwa
WRAS APPROVED PRODUCT

Product image

Scale drawing

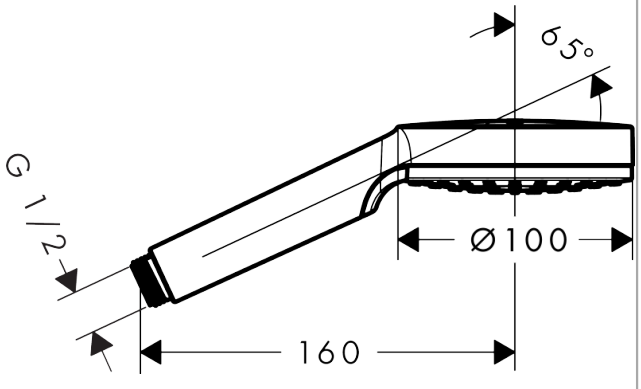

Crometta
Hand shower 100 1jet Green 6 l/min
Surfaces: **white/chrome** Art. no. : **26334400**

Flowchart

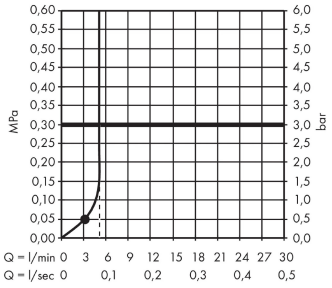

The consumption was measured in combination with the appropriate fittings (thermostat/mixer/ in-wall valve) to reflect actual application in practice.