hansgrohe

Raindance Select S
Shower set 120 3jet with shower rail 150 cm and soap dishes
Surfaces: **chrome** Art. no. : **27646000**

Description

product features

- Consists of: hand shower, shower bar, shower hose, slider, soap dishes
- made of safety glass
- Spray pattern: Rain, RainAir, Whirl
- Select button to comfortably switch between spray modes
- Shower head size: 125 mm
- pivot connector prevent hose from tangling
- 90° position adjustable slider, pivots left and right, up and down
- maximum flow rate 15 l/min at 3 bar
- 41 mm width of shower bar
- wall supports of plastic
- Wall bar type: flat aluminium profile with safety glass finish
- Finish: chrome or white

Article Details

Price excl. VAT £ 475.00

Technology

Design awards

Product image
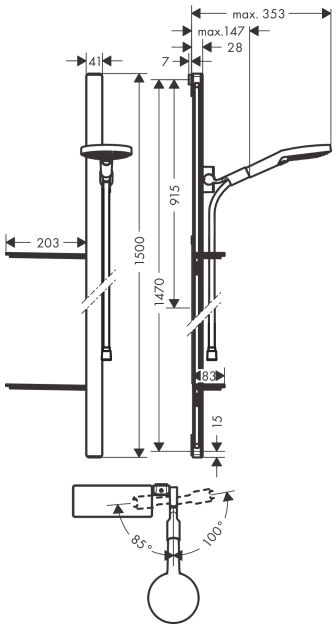
Scale drawing