hansgrohe

Focus
Single lever bath and shower mixer Monotrou with 2 flow rates
Surfaces: **chrome** Art. no. : **31938000**

Description

product features

- spout 130 mm long
- designed to run 2 outlets
- Connection type: ⅜" hose connections
- Spray type mixer: normal spray
- Flow rate (at 3 bar): 20 l/min
- ceramic cartridge with 2 flow rates
- Maximum temperature can be adjusted on installation
- automatically reverts from shower to bath spout when turned off
- Intrinsically safe against backflow
- Noise class: I

Article Details

Price excl. VAT £ 154.17

Technology

Product image

Scale drawing

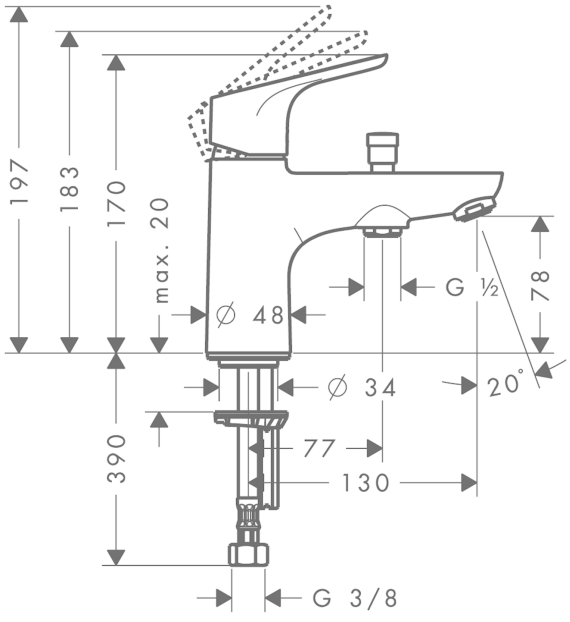

Flowchart

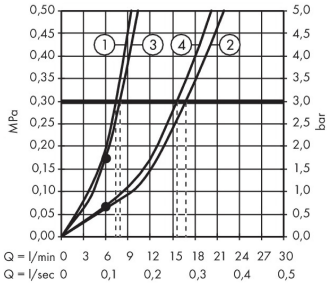

① Tub outlet ECO
② Tub outlet
③ Shower outlet 1B-resistance ECO
④ Shower outlet with 1B-resistance