AXOR

hansgrohe

Talis M51
Single lever kitchen mixer 200 with pull-out spray, 2 spray modes
Surfaces: **chrome** Art. no. : **72813000**

Description

product features

- ComfortZone 200 provides space for greater freedom of movement
- Swivel spout adjustable in 2 steps to 110° or 150°
- laminar spray and spray jet
- lockable shower spray, spray return through pressing spray diverter
- MagFit magnetic shower support
- quick connect hose
- Flow rate (at 3 bar) 11 l/min
- Operating pressure: min. 1 bar/max. 10 bar
- ceramic cartridge
- ⅜" hose connections
- integrated non-return valve

Article Details

Price excl. VAT	£ 354.17

Technology

Product image

Scale drawing

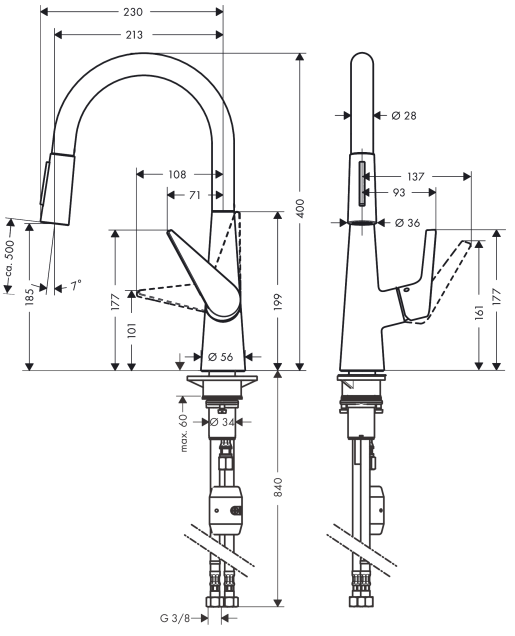
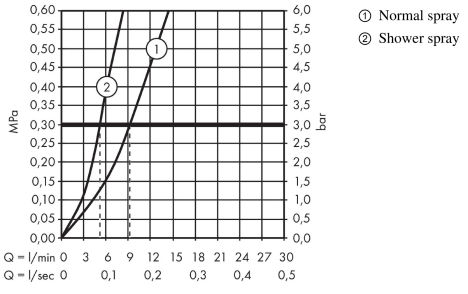
Flowchart