RAK SHOWERING
Round | 2 Outlet | 2 Handle | Thermostatic

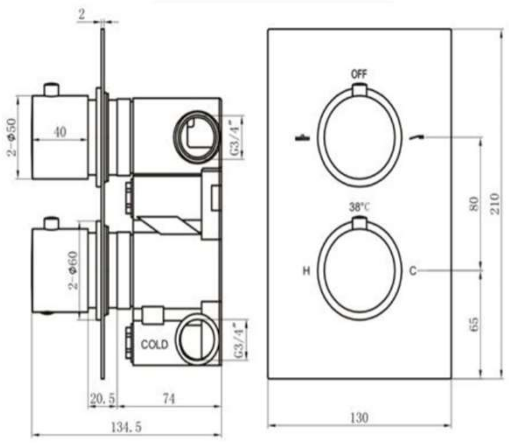

Dimensions:	210w x 134.5d x 130h mm
Colour:	CHROME
Code:	RAKSHW3202R
Pressures:	0.5 BAR – 7.0 BAR
Warranty :	15 YEARS
Weight:	2.95 KG

Dimensions: All Dimensions in mm tolerance ± 5% for below 200mm and ± 3% for above 200mm.
Note: Due to a continuing development programme to improve design and performance the manufacturer reserves all rights to vary specifications without prior information.
Please note accessories are for photographic use only.